Capresso

Triple Brew™

Coffee & Tea Maker

Model #352

- **Instructions**
- **Warranty**

IMPORTANT SAFEGUARDS

When using electrical appliances, basic safety precautions should always be followed, including:

1. Read all instructions.
2. Do not touch hot surfaces. Use handles or knobs.
3. To protect against fire, electrical shock or personal injury, do not immerse cord, plugs or appliance in water or other liquid.
4. Close supervision is necessary when any appliance is used by or near children.
5. Unplug appliance from outlet when not in use and before cleaning. Allow appliance to cool before putting on or taking off parts, and before cleaning the appliance.
6. Do not operate any appliance with a damaged cord or plug or after the appliance malfunctions, or has been damaged in any manner. Return appliance to the nearest authorized service facility for examination, repair, or adjustment.
7. The use of accessory attachments not recommended by the appliance manufacturer may result in fire, electric shock, or injury to persons.
8. Do not use outdoors.
9. Do not let cord hang over edge of table or counter top, or touch any hot surfaces.
10. Do not place on or near a hot gas or electric burner, or in a heated oven. Keep lid on top rim of carafe during brewing cycle. The carafe is designed for use with this appliance. It must never be used on a range top. Do not set a hot carafe on a wet or cold surface.
11. Always attach plug to appliance first, then plug the cord into the wall outlet. To disconnect, first turn ‘OFF’, then remove plug from wall outlet.
12. Do not use appliance for other than intended use.
13. Do not use a cracked carafe or a carafe having a loose or weakened handle.
14. Do not clean carafe with harsh cleansers, steel wool pads, or abrasive materials.
15. WARNING: Risk of Fire or Electric Shock. Do not remove the cover of the unit. No user serviceable parts inside. Repair should be done by authorized service personnel only.
16. This appliance is not intended for use by persons (including children) with reduced physical, sensory or mental capabilities, or lack of experience and knowledge, unless they have been given supervision or instruction concerning use of the appliances by a person responsible for their safety. Children should be supervised to ensure that they do not play with the appliance.
17. For household use only.

SAVE THESE INSTRUCTIONS

SPECIAL CORD SET INSTRUCTIONS

1. A short power supply cord is provided to reduce risks resulting from becoming entangled in or tripping over a longer cord.
2. Extension cords may be used if care is exercised in their use.
3. If an extension cord is used,
   a. The marked electrical rating of the extension cord must be as great as the electrical rating of the appliance,
   b. The longer cord should be arranged so that it will not drape over the countertop or table top where it can be pulled on by children or tripped over.

4. This appliance has a polarized plug (one blade is wider than the other). To reduce the risk of electric shock, this plug will fit in a polarized outlet only one way. If the plug does not fit fully in the outlet, reverse the plug. If it still does not fit, contact a qualified electrician. Do not attempt to defeat this safety feature.

CAUTION

This appliance is for household use. Any servicing other than cleaning and user maintenance should be performed by an authorized service agent.

1. Do not immerse in water or try to disassemble appliance.
2. To reduce the risk of fire or electric shock, do not remove the base. No user serviceable parts are inside. Repair should be done by authorized service personnel only.
3. Check voltage to be sure that the voltage indicated on the name plate agrees with your voltage.
4. Never use warm or hot water to fill the water container. Use cold water only!
5. Never operate the machine without the brewing unit in place and coffee or tea filter attached.
6. Keep hands and cord away from hot parts of the appliance during operation.
7. Never use the coffee or tea filter without the attached safety grip.
8. It is important to use only the coffee filter when brewing coffee and only use the tea filter when brewing tea.
9. Never clean with scouring powders or hard implements.
10. Follow the instructions for Decalcifying.
11. Do not use finely ground coffee in this pressurized machine. It can cause brewing unit to pop out and cause burns.

Welcome and Thank You

Thank you for choosing the Capresso Triple Brew™ Coffee & Tea Maker. Please read all operating instructions before using your Triple Brew™. Understanding and complying with these directions is essential to ensure that the machine is utilized without risk and to ensure safety during operation and maintenance.

How To Contact Capresso Customer Service

Should you require further information or if particular problems occur that are not covered in this manual, please

- CALL our toll free HELP LINE: 1-800-767-3554 Monday-Thursday 8:00AM to 9PM, Friday 8:00AM to 8PM and Saturday 9AM to 5PM Eastern Standard Time. Feel free to call at any time. If you are connected to our voicemail, PLEASE DO NOT HANG UP. Leave your name, telephone number and time to call back. Please leave the name or model number of your Capresso product, in this case it is Triple Brew™, Model #352.
- FAX us at 1-201-767-9684 • E-MAIL us at contact@capresso.com
- VISIT our website at www.capresso.com

Capresso Triple Brew™, Model #352 Product Registration/ Ordering Parts & Accessories

- Please go to our website www.capresso.com to register your product and to order any additional parts and accessories.

Fig. 1

A. Removable Water Tank
B. Control Panel (see Fig. 4)
C. Removable Brewing Unit
D. Coffee Filter
E. Glass Carafe
F. Tea Filter
G. Removable Drip Tray

Fig. 2

Side of Removable Brewing Unit

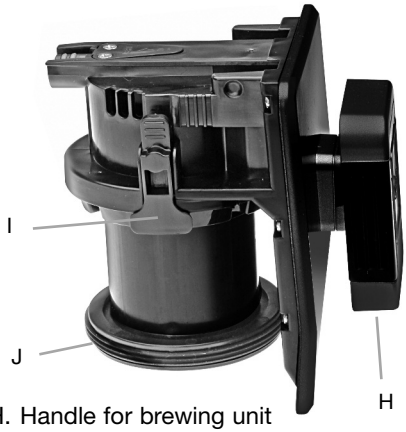

H. Handle for brewing unit
I. Locking Tabs
J. Gasket

Bottom of Removable Brewing Unit

K. Shower head

Fig. 3

Filters

Coffee Filter
Black safety grip
Smooth inside
filter wall

Tea Filter
Gray safety grip
4 ribs on inside
filter wall

Fig. 4 Control buttons

ON/OFF SMALL LARGE CARAFE TEA

Small programmable . . . 4 oz. – 16 oz.
Large programmable . . . 4 oz. – 16 oz.
Carafe . . . . . 42 oz.
Tea programmable . . . . . 4 oz. – 16 oz.

Fig. A

Fig. B

Fig. C

Fig. D

Fig. E

Fig. F

Fig. G

Fig. H

1. The Capresso Triple Brew™ Coffee & Tea Maker

Thank you for purchasing the Capresso Triple Brew™ Coffee & Tea Maker. For Warranty please see the end of this booklet. For accessories and parts please contact Customer Service or order on our **website: www.capresso.com**
The Capresso Triple Brew™ Coffee & Tea Maker is designed to allow you to completely customize your brew from a single cup to a full carafe. The large capacity black coffee filter allows you to add up to 60 grams of coffee (12 Tbsp.) to brew into a single cup to achieve the strongest coffee. The filter will automatically adjust to the amount of coffee added and will fully saturate the grounds for a perfect brew every time. Switch to the gray tea filter for a quick and hot cup of brewed tea.

2. Equipment

The Triple Brew™ comes complete with: Glass Carafe with Lid • Removable Brewing Unit • Black Coffee Filter (attached to Removable Brewing Unit) • Gray Tea Filter • Removable Drip Tray • Instruction Book

3. Before Using for the First Time

Please read all of the instructions in this booklet before operating your new machine. Understanding and complying with these instructions is essential to ensure that the machine is utilized without risk and to ensure safety during operation and maintenance.

After unpacking your machine clean all the loose parts with warm water and make yourself familiar with the different parts and functions. After reading these instructions, clean the internal parts of the machine by making two carafes using only water, without any ground coffee or tea inside the filter. Only use your Triple Brew™ on a flat, level, dry and stable surface.

4. Filling the Water Tank

Grasp the water tank lid and pull the water tank up (Fig. A). Fill the water tank with fresh cold water. Never fill the water tank past the MAX level of 52 oz. Place the water tank back onto the machine, pushing down firmly to engage the base valve. Make sure the hook on top of the water tank is inserted into the opening in the back of the machine. The pump system inside the machine will only use the amount of water programed in the control panel for each button and will not use the entire water tank like typical drip coffee makers. To adjust volume of beverage see chapter 12, Programming Volume.
NOTE: If water tank is empty during brewing the machine will alert you by all icons blinking rapidly at the same time. See chapter 17, Troubleshooting.

5. Control Panel

a. The ON/OFF button powers the machine on and off. When the machine is plugged in and the ON button is pushed the SMALL, LARGE, CARAFE & TEA icons will start blinking one at a time to indicate that the machine is heating up. Once all icons stop flashing and are lit solid at the same time the machine is ready for use. Push the ON/OFF button again to turn the machine off.

b. There are four brewing buttons:

   SMALL: Factory set to brew 4 oz. Can be programmed to brew 4 oz. to 16 oz.

   LARGE: Factory set to brew 8 oz. Can be programmed to brew 4 oz. to 16 oz.

   CARAFE: Factory set to brew 42 oz. Cannot be reprogramed.

   TEA: Factory set to brew 8 oz. Can be programmed to brew 4 oz. to 16 oz.
   Note: See chapter 12 for programming volume.

c. During brewing the icon on the selected button will start to flash and the remaining button icons will stay solid. Brewing will be stopped automatically based on volume selected. Brewing can be stopped at any time by pressing the flashing button or the ON/OFF button.

6. Filling and Inserting the Filter and Brewing Unit

The Triple Brew™ comes with two separate filters for coffee and tea (Fig. 3). The coffee filter has a black heat resistant grip around the outside of the filter while the tea filter has a grey heat resistant grip around the outside of the filter. The brewing unit will automatically adjust to the amount of coffee placed inside the filter. It is important to use only the coffee filter when brewing coffee and use only the tea filter when brewing tea. The tea filter has 4 ribs along the inside of the filter that keep the brewing unit from compacting the tea leaves.

The coffee filter has a maximum capacity of 60 grams (12 tablespoons). The tea filter has a maximum capacity of approximately 40 grams (8 tablespoons). Do not fill tea filter past 4 ribs along the inside of the filter. Adjust strength of coffee or tea by adding as much or as little coffee or tea to the filter, up to maximum capacity (See chapter 9 and 11 for recommended coffee and tea quantities).

1. Remove brewing unit from front of the machine by pulling the handle straight out. (Fig B)
2. Unlock coffee or tea filter from brewing unit by pressing the tab on each side of brewing unit. (Fig C)
3. Remove coffee or tea filter from brewing unit by pulling straight down, away from brewing unit.
4. Add desired amount of ground coffee or tea leaves (or tea bags) into the filter. (Fig D) See chapter 9 and 11 for recommended coffee and tea quantities.
   Note: A coarse to medium grind is recommended for the Triple Brew™. Using a fine grind can cause longer brew times and lead to a clogged brewing unit. If the flow of coffee seems to slow down or stop before the desired volume has been reached, this indicates that the coffee is too finely ground.
   CAUTION: Using finely ground coffee can cause the brewing unit to pop out during brewing and interrupt the brewing cycle.
   CAUTION: Never use coffee filter or tea filter without provided safety grip!
5. Place filter back onto brewing unit by pushing up, ensuring it is locked into place on the brewing unit. (Fig E) The tabs on each side of the brewing unit should click into position to show it is locked.
6. Slide brewing unit with filter locked into place back onto machine ensuring it locks fully in position.
   CAUTION: Never operate the machine without the brewing unit in place and coffee or tea filter attached.

7. Making a Single Cup of Coffee

Coffee makers produce very hot water. If you follow the sequence as described below you will avoid possible accidents which might cause severe injuries and burns.

1. Fill water tank as described in chapter 4, Filling the Water Tank.
2. Follow steps above in chapter 6 to fill the coffee filter with ground coffee and attach filter to brewing unit.
   CAUTION: Never use coffee filter or tea filter without provided safety grip!
3. Ensure brewing unit is lined up in correct position when sliding back into the machine.

4. Remove carafe from machine and replace with drip tray. (Fig F)
   NOTE: The machine will not brew SMALL or LARGE when drip tray is not in place.
5. Place adequately sized cup underneath the brewing unit.
6. Press SMALL or LARGE button to start brewing. (Fig H)
7. The selected button will start to flash and will continue to flash during brewing.
8. Once programmed volume has been reached the brewing will automatically stop and icon on button will stop blinking.
9. To stop brewing at any time, press the flashing button or ON/OFF button.
10. See chapter 12 on how to program different volumes for SMALL and LARGE buttons.
11. After brewing is complete, brewing unit and filter can be removed from the machine by pulling the handle of the brewing unit straight out. (Fig B)
    CAUTION: Take care when removing brewing unit and filter from machine as excess hot water could be stuck inside filter. Wait until all hot water has passed through the filter before removing the brewing unit.
12. To remove coffee filter from brewing unit press locking tab on each side of brewing unit to unlock the filter (Fig C). Pull filter off of brewing unit and clean as described in chapter 15, Cleaning & Maintenance.

8. Making a Carafe of Coffee

1. Fill water tank as described in chapter 4, Filling the Water Tank.
2. Follow steps above in chapter 6 to fill the coffee filter with ground coffee and attach filter to brewing unit.
   CAUTION: Never use coffee filter or tea filter without provided safety grip!
3. Ensure brewing unit is lined up in correct position when sliding back into the machine.
4. Remove drip tray from machine and replace with carafe. (Fig G)
   NOTE: The machine will not brew CARAFE if drip tray is in place.
5. Press CARAFE button to start brewing.
6. The CARAFE button will start to flash and will continue to flash during brewing.
7. To stop brewing at any time, press the flashing CARAFE button or ON/OFF button.
   CAUTION: Do not remove the carafe during brewing!
8. After brewing is complete, brewing unit and filter can be removed from the machine by pulling the handle of the brewing unit straight out. (Fig B)
   CAUTION: Take care when removing brewing unit and filter from machine as excess hot water could be stuck inside filter. Wait until all hot water has passed through the filter before removing the brewing unit.
   To remove coffee filter from brewing unit press locking tab on each side of brewing unit to unlock the filter (Fig C). Pull filter off of brewing unit and clean as described in chapter 15, Cleaning & Maintenance.

9. How Much Coffee?

We recommend using one level tablespoon (5 grams) of coarse to medium ground coffee per 5 oz. of water. If you like your coffee extremely strong, you can adjust the coffee to your liking up to 12 tablespoons (60 grams).

CAUTION: Never use more than 12 tablespoons (60 grams of coffee) as this will put too much strain on the brewing unit and cause it to break. Avoid using coffee that is ground too fine as it can lead to clogging in the brewing unit.

	Light	Medium	Strong	Extra Strong
Small (4 oz.)	2 tsp.	1 Tbsp.	2 Tbsp.	3+ Tbsp.
Large (8 oz.)	1 Tbsp.	2 Tbsp.	4 Tbsp.	6+ Tbsp.
Carafe (42 oz.)	5 Tbsp.	8 Tbsp.	10 Tbsp.	12 Tbsp. (MAX)

10. Making Tea

1. Fill water tank as described in chapter 4, Filling the Water Tank.
2. Follow steps above in chapter 6 to fill tea filter with tea leaves or tea bags and attach filter to brewing unit.
   CAUTION: Never use coffee filter or tea filter without provided safety grip!
3. Ensure brewing unit is lined up in correct position when sliding back into the machine.
4. Remove carafe from machine and replace with drip tray. (Fig F)
   NOTE: The machine will not brew TEA when drip tray is not in place.
5. Press TEA button to start brewing.
6. The TEA button will start to flash and will continue to flash during brewing.
7. Once programmed volume has been reached the brewing will automatically stop and icon on button will stop blinking.
8. To stop brewing at any time, press the flashing TEA button or ON/OFF button.
9. After brewing is complete, brewing unit and filter can be removed from the machine by pulling the handle of the brewing unit straight out. (Fig. B)
   CAUTION: Take care when removing brewing unit and filter from machine as excess hot water could be stuck inside filter. Wait until all hot water has passed through the filter before removing the brewing unit.
10. To remove tea filter from brewing unit press locking tab on side of brewing unit to unlock the filter. (Fig C) Pull filter off of brewing unit and clean as described in chapter 15, Cleaning & Maintenance.

11. How Much Tea?

We recommend using two level teaspoons (4 grams) of tea leaves per 8 oz. of water. If you like your tea extremely strong, you can adjust the amount of tea leaves to your liking up to 8 tablespoons (40 grams).
CAUTION: Never fill the tea filter with tea leaves or tea bags past the 4 ribs on the inside of the filter.

	Light	Medium	Strong	Extra Strong
Tea (8 oz.)	2 tsp.	1 Tbsp.	2 Tbsp.	3+ Tbsp.
Tea (8 oz.)	1 tea bag	3 tea bags	4 tea bags	5 tea bags

12. Programming Volume

The SMALL, LARGE and TEA button volumes can be reprogrammed to desired volume as outlined in chapter 5, Control Panel. The CARAFE button cannot be reprogrammed.

1. Follow steps 1-5 in chapter 7, Making a Single Cup of Coffee.
2. Press and hold the button that will be reprogrammed (SMALL, LARGE or TEA) for approximately 3 seconds. The icon light will start to blink rapidly while the beverage is being brewed into the cup.
3. Once the desired volume has been reached in the cup press the flashing button again and the volume will be reprogrammed for the button.

NOTE: Extra liquid from the filter will be dispensed into the cup after button is released. Leave extra room in cup for drainage.
The machine can be reset to factory programmed settings by pressing the CARAFE button for approximately 3 seconds until you see "SMALL" and "LARGE" buttons blinking at the same time. The machine is now reset to factory programmed settings.

13. Making Iced Coffee and Iced Tea

To make iced beverages, simply double the amount of coffee or tea you normally would use for hot beverages and brew directly into an iced filled cup.

14. Sleep Mode / Keep Warm

If the machine is left on and not activated by pressing one of the buttons for 15 minutes, the machine will go into sleep mode to save energy. During sleep mode the icon lights will blink sequentially with 50% less brightness. To activate machine again, simply press one of the buttons. When brewing a CARAFE of coffee, the heating plate will stay warm for 2 hours after brewing. During the keep warm period the control panel will go into sleep mode after 15 minutes of no activation. The heating plate will continue to keep the carafe warm until the carafe is removed from the machine. Once the carafe is removed from the machine the heating plate will turn off.

15. Cleaning & Maintenance

- Always turn machine OFF and disconnect the plug from the wall outlet and allow the appliance to cool down before cleaning.
- Do not immerse the appliance in water or any other liquid.
- Do not use harsh abrasives to clean. Wipe down the appliance housing with a damp cloth.
- Empty the drip tray regularly so it does not overflow.
- Dishwasher safe (upper rack) are: glass carafe, drip tray, coffee filter and tea filter.
- Clean the lid of the carafe under running water.
- Clean the removable brewing unit under running water, making sure the shower head is completely clear of all coffee particles.
  NOTE: Do not put removable brewing unit into the dishwasher!
- Clean the coffee and tea filter after each use, otherwise particles from the coffee and tea will clog up the small filter openings.
- Never use sharp instruments or knives to clean out coffee or tea filter.

16. Decalcifying

Decalcify at least every 2-4 months depending on local water hardness or when brewing a 42 oz carafe takes more than 10 minutes. Only use decalcifying agents suitable for drip coffee makers like Capresso Cleaning Solution and follow the instructions which come with the agent.
Attention: Decalcifying agents are acids and therefore must be handled properly. Please check the information on the packaging of the decalcifying agents before using.

- Dissolve 1 oz (28 g) of descaler with 32 oz (1 L) of water and pour mixture into water tank. You can also use 20 to 24 oz. of white household vinegar.
- Ensure removable water tank is pushed into place and locks with the base.
- Ensure removable brewing unit with coffee or tea filter attached is in place.
- Place the empty carafe with the lid closed underneath the filter holder.
- Turn the machine on and press CARAFE button and let brew for 2 minutes.
- Turn machine off and let sit for 15 minutes.
- Turn machine on again and press CARAFE button to let the remaining Cleaning Solution pass through.
- Turn the coffee maker OFF, remove the carafe, empty and rinse a few times with fresh cold water.
- Rinse the brewing unit and filter thoroughly with fresh water.
- Let the coffee maker cool down for a few minutes.
- Fill the water tank with fresh cold water and brew through machine to fully rinse.
- Turn off coffee maker and empty carafe.

17. Troubleshooting

All icon lights are blinking rapidly at the same time:
Water tank is empty and needs to be filled. Once water tank is filled with water and placed back onto the machine, press one of the buttons to stop lights from blinking.

Button is pressed but nothing is being brewed:
- Ensure drip tray is in place for SMALL, LARGE, TEA buttons.
- Ensure carafe is in place for CARAFE button.
- Ensure brewing unit is lined up correctly.
- Ensure water tank is pushed down all the way and base valve is connected.
- Ensure plug is inserted in active wall outlet at proper voltage.

Coffee or tea filter cannot be locked onto brewing unit:
Ensure that quantity of coffee or tea is not over maximum level as stated in chapters 9 and 11.
- Check that both locking tabs are not damaged.

Cannot reprogram the volume:
- Only the SMALL, LARGE & TEA buttons can be reprogrammed.
- Ensure that programmed volume falls between stated ranges as described in chapter 5, Control Panel.

Coffee is taking too long to brew or coffee is not brewing at all:
- Ensure that coffee is not ground too fine.
- Ensure that the maximum recommend dosage of ground coffee (12 Tbsp.) has not been exceeded.
- If problem persists contact Customer Service.

Brewing unit pops out while machine is brewing:
- Brewing unit has limescale build-up. Run a decalcifying cycle as described in chapter 16.
- Coffee is too fine. Use a coarser grind.
- Brewing unit gaskets or o-rings are damaged. Contact Customer Service to order a new brewing unit.

18. LIMITED ONE-YEAR WARRANTY

This warranty covers your CAPRESSO machine, model #352 Triple Brew™. The model # can be found on the bottom of the machine. This warranty is in effect for one year from the date of the first consumer purchase.
This warranty covers all defects in materials or workmanship (parts and labor) **EXCEPT BREAKAGE OF GLASS!**

This warranty does not cover:

- Any machine not purchased from an Authorized Dealer.
- Commercial use of machine.
- Damage caused by accident, abuse, negligence, misuse, improper operation or failure to follow instructions contained in this manual.
- Any service or alteration performed by an unauthorized person, company or association.
- Damage caused by neglecting and omitting maintenance, cleaning and decalcifying.
- Carafes (Glass or Thermal).

Other limitations and exclusions:

Any implied warranties including fitness for use and merchantability are limited in duration to the period of the express warranty set forth above and no person is authorized to assume for JURA Inc. any other liability in connection with the sale of the machine. JURA Inc. expressly disclaims liability for incidental and consequential damages caused by the machine. The term "incidental damages" refers to the loss of the original purchasers time, loss of the use of the machine or other costs relating to the care and custody of the machine. The term "consequential damages" refers to the cost of repairing or replacing other property which is damaged when this machine does not work properly. The remedies provided under this warranty are exclusive and in lieu of all others. This warranty gives you specific legal rights, and you may also have other rights which vary from state to state.

Customer Service

1-800-767-3554

Mon-Thu 8AM – 9PM • Fri 8AM – 8PM • Sat 9AM – 5PM
Eastern Standard Time.

email: contact@capresso.com

JURA Inc.
20 Craig Road, Montvale, NJ 07645

201-767-3999 • Fax: 201-767-9684
Website: www.capresso.com