Capresso

EspressoClassic Model #114
EspressoClassic Luxe Model #113

- Operating Instructions
- Product Registration
- Warranty

CONTENTS

Section Page
IMPORTANT SAFEGUARDS.....2
LINE DRAWINGS (FIGURES 1-18)..... 3-5
WHO IS CAPRESSO? 7
1. The EspressoClassic Coffee Center..... 7
2. Capresso Plus Service™ 7
3. Equipment 8
4. Please Do Not! 8
5. Preparing the Machine 8
6. Automatic Water Discharge Into Tray..... 8
7. Espresso Coffee 8
8. The Coffee Grind 9
9. **MAKING ESPRESSO** 9
10. Cleaning Porta Filter and Sieve After Each Use 9
11. Choosing the Right Sieve.....10
12. Using Pre-Packed Coffee Pods 10
13. Frothing and Steaming 10
14. **MAKING CAPPUCCINO** 10
14a. Frothing Milk for Cappuccino 11
14b. Increasing Temperature of Frothed Milk 11
14c. Cleaning the Dual Frother 11
15. **MAKING LATTE** 12
16. Dispensing Hot Water for Tea, Soup, Etc. 12
17. Cleaning 12
18. Cleaning Sieves and Inner Screen 12
19. Decalcifying (with Vinegar) 12
20. Decalcifying (with Durgol) 13
21. Troubleshooting.....13
22. Frequently Asked Questions About...Coffee.....14
Frequently Asked Questions About...The Espresso Machine.....15
23. Limited Warranty.....15
Product Registration (mail or fax).....16
Capresso Customer Service.....17

IMPORTANT SAFEGUARDS

When using electrical appliances, basic safety precautions should always be followed, including the following:

1. Read all instructions.
2. Do not touch hot surfaces. Use handles or knobs.
3. To protect against fire, electric shock and injury to persons, do not immerse cord, plugs, or body of machine in water or other liquid.
4. Close supervision is necessary when any appliance is used by or near children.
5. Unplug from outlet when not in use and before cleaning. Allow to cool before putting on or taking off parts, and before cleaning the appliance.
6. Do not operate any appliance with a damaged cord or plug or after the appliance malfunctions, or has been damaged in any manner. Return appliance to the nearest authorized service facility for examination, repair, or adjustment.
7. The use of accessory attachments not recommended by the appliance manufacturer may result in fire, electric shock, or injury to persons.
8. Do not use outdoors.
9. Do not let the cord hang over the edge of a table or counter, or touch hot surfaces.
10. Do not place on or near a hot gas or electric burner, or in a heated oven.
11. Always attach plug to appliance first, then plug cord into the wall outlet. To disconnect, turn any control to “OFF”, then remove plug from wall outlet.
12. Do not use appliance for other than intended use.
13. Use extreme caution when disposing hot steam.
14. For household use only.

SAVE THESE INSTRUCTIONS

SPECIAL CORD SET INSTRUCTIONS

1. A short power supply cord is provided to reduce the risk resulting from becoming entangled in or tripping over a long cord.
2 Longer extension cords are available and may be used if care is exercised in their use.
3. If an extension cord is used,

a. the marked electrical rating of the extension cord should be at least as great as the electrical rating of the appliance, and
b. the longer cord shall be arranged so that it will not drape over the counter top or tabletop where it can be pulled on by children or tripped over.

fig. 1 **EspressoClassic User Components**

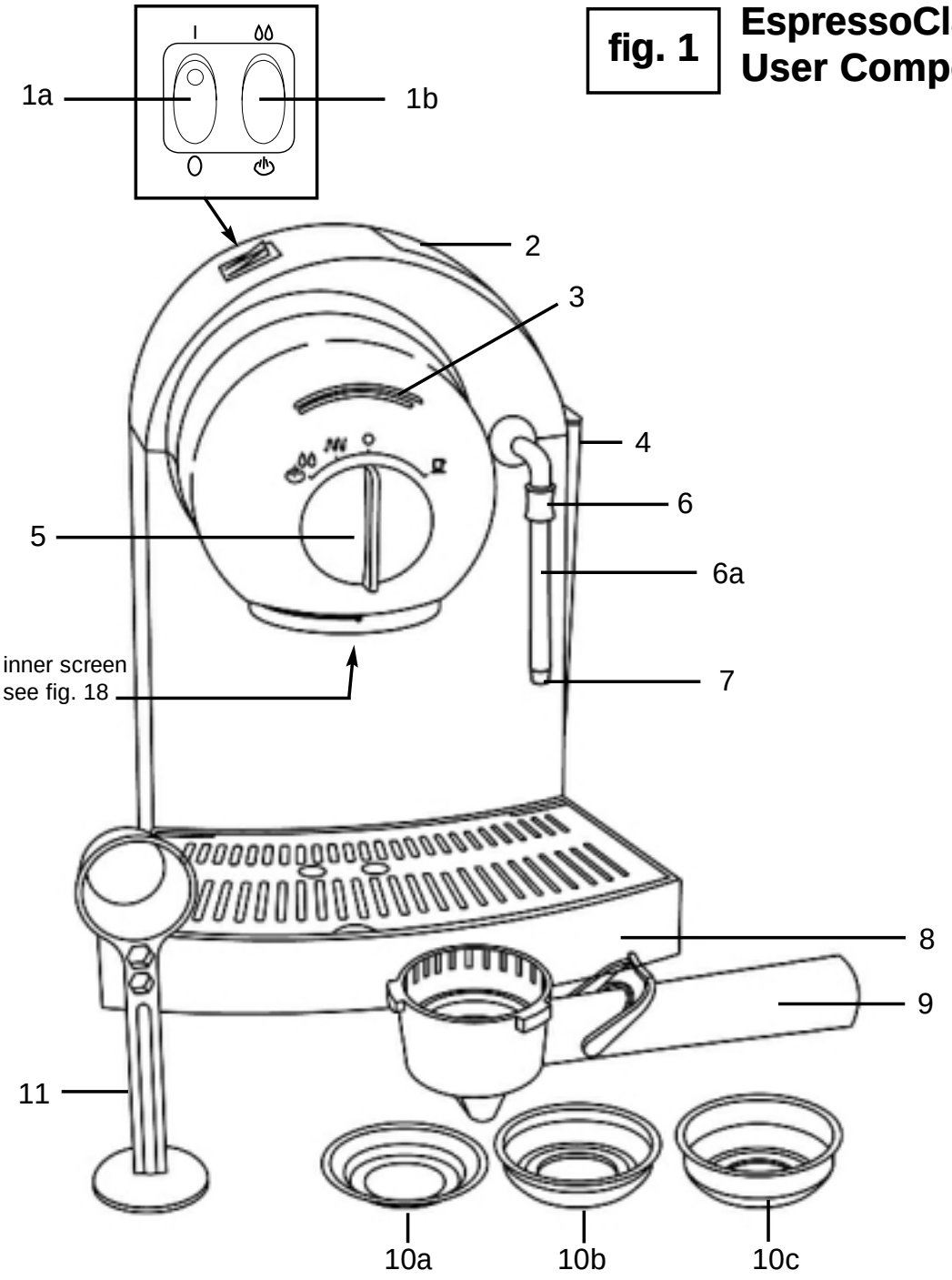

1a On/Off switch with red indicator light
1b Selector switch for hot water or steam
2 Lid for water container
3 Thermostat Light
4 Water container, removable
5 Selector knob
6 Hot Water / Frother System
6a Cylinder (movable)
7 Frother Tip (detachable)
8 Drip tray with grid (removable)
9 Porta filter
10a Pod sieve
10b Small sieve, one cup
10c Large sieve, two cups
11 Measuring scoop with tamper

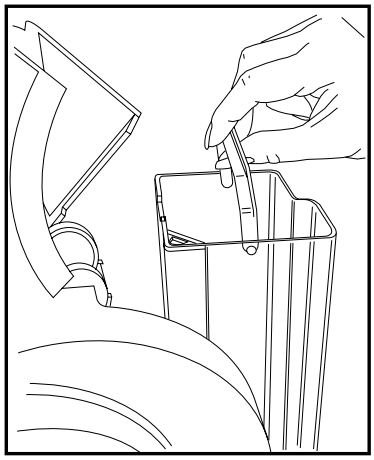

fig. 2

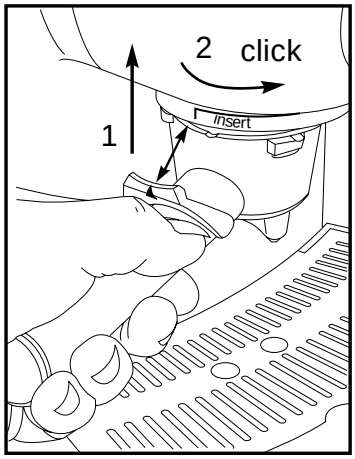

fig. 3

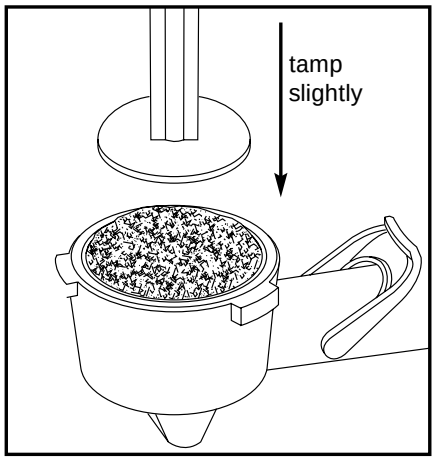

fig. 4

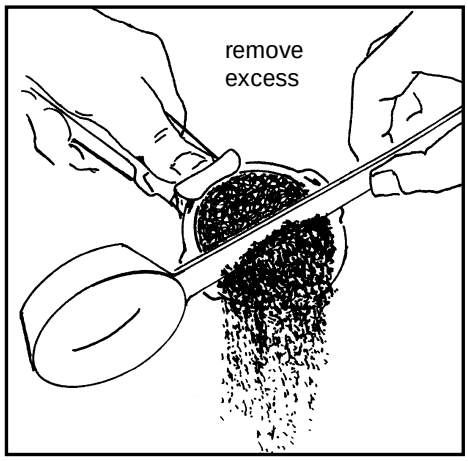

fig. 4a

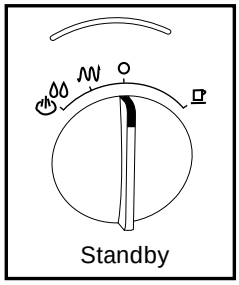

fig. 5

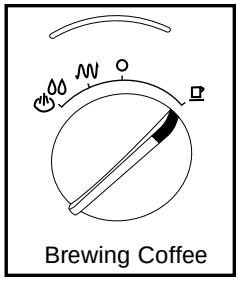

fig. 6

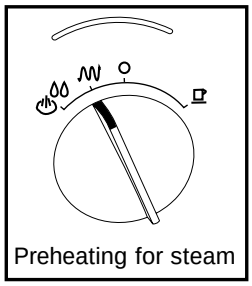

fig. 7

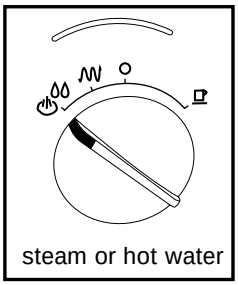

fig. 8

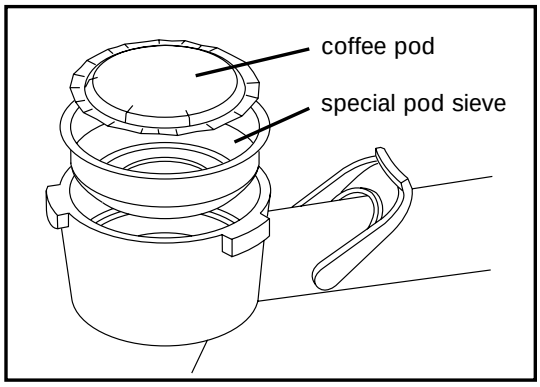

fig. 9

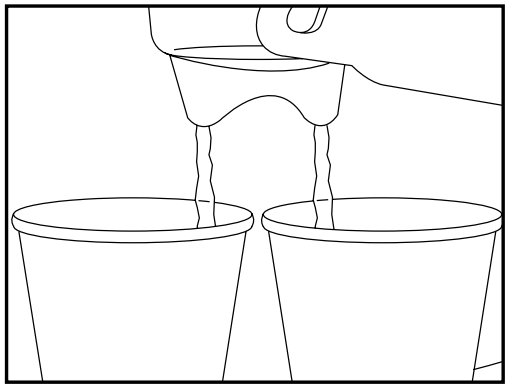

fig. 10

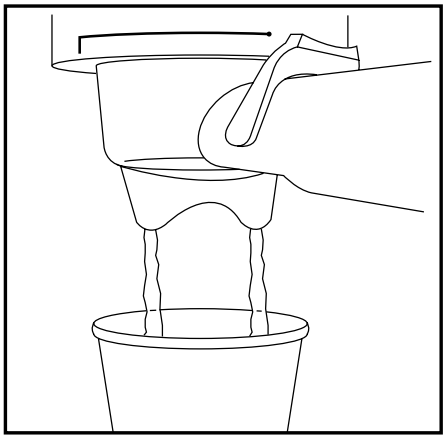

fig. 11

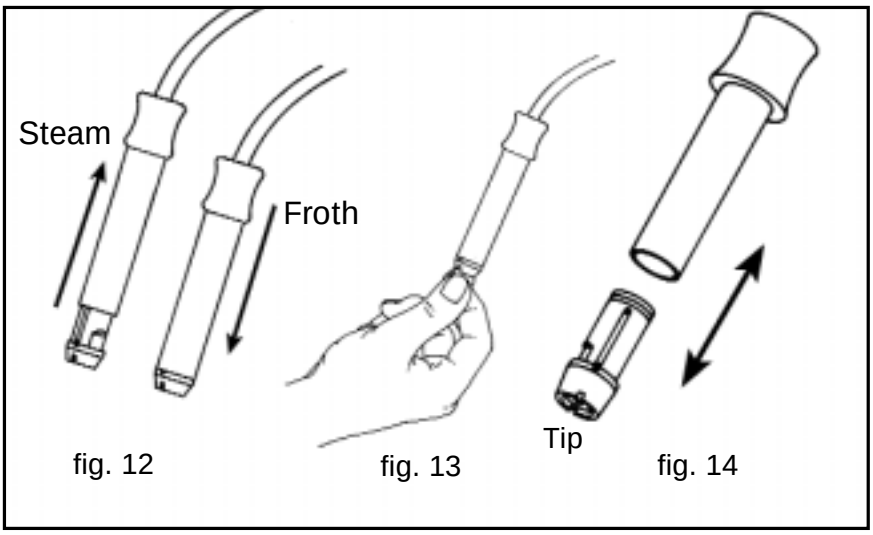

fig. 12 fig. 13 fig. 14

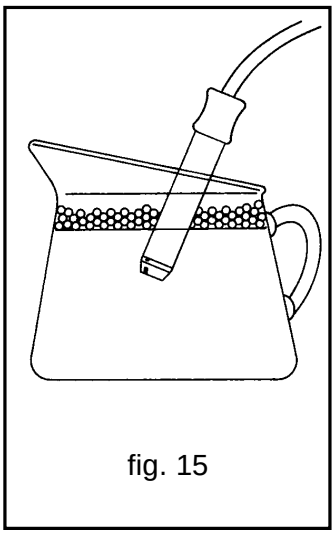

fig. 15

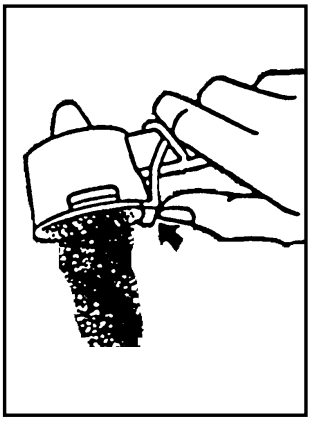

fig. 16

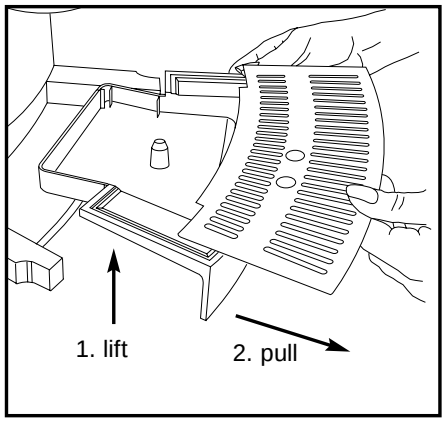

fig. 17

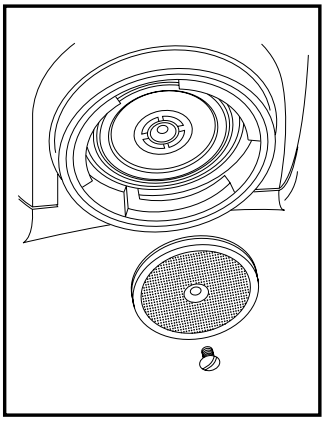

fig. 18

WHO IS CAPRESSO?

With more than 20 years experience in coffee equipment for consumers, I founded Capresso, Inc. in 1994. My goal is to provide coffee makers and espresso/cappuccino machines for the customer who wants a superior product. Safety, reliability, performance, and convenience are the cornerstones of Capresso quality. Our products are available through selected retailers who can provide expert advice and will treat you as a valued customer. For a listing of Capresso dealers near you, please check out our website: www.capresso.com.

I hope you will enjoy your new Capresso product and will recommend it to your friends.

Michael Kramm, President

1. THE ESPRESSOCLASSIC COFFEE CENTER

Coffee experts consider brewing coffee under high pressure to be the ideal process to extract maximum flavor and aroma. The EspressoClassic produces perfect espresso – coffee with a thick, foamy layer on top called "crema." The "crema" traps the fine aromatics and the light gaseous flavors that register on the palate. The "crema" keeps flavor locked in that would otherwise escape. The high pressure and short brewing time prevent the extraction of bitter oils and release less caffeine than other brewing methods. For this reason, many European restaurants serve "crema" coffee only.

Whether you are brewing a 1 oz. shot of espresso or a 12 oz. mug of coffee, your EspressoClassic produces the absolute freshest and most aromatic cup of "crema" coffee possible. Not only will your EspressoClassic make the perfect espresso, but within seconds the patented DualFrother system turns your espresso into a delicious cappuccino or latte.

With its moveable cylinder you can select from "steaming only" (for lattes) or "steaming and frothing" (for cappuccinos). The extra-long cylinder allows you to steam directly in tall latte glasses or in extra large pitchers.

The separate hot water function allows you to make a cup of hot tea or instant soup in 30 seconds.

Your EspressoClassic is a true coffee center. Using the EspressoClassic reduces the time and effort normally involved in making espresso and cappuccino. The EspressoClassic comes equipped with two "regular" sieves as well as a "pod" sieve. Using coffee pods eliminates measuring coffee and facilitates clean-up.

2. CAPRESSO Plus Service™

- **HELP CALL 1-800-767-3554**
  Monday – Friday 9AM to 9PM
  Saturday – 9AM to 5PM

Eastern Standard Time

- **Email address:**

contact@capresso.com

- **Fax:** 201-767-9684
- **Website:** www.capresso.com

Our goal is to make sure that all of our customers are satisfied with their Capresso purchase. If you need assistance, call the above number. Feel free to call any time. If you are connected to our voicemail, PLEASE DO NOT HANG UP. Leave your name, telephone number, and please say, "EspressoClassic" so we know what machine you are calling in reference to. Let us know the best approximate time to call you back, or email or fax us at anytime.

Our unique CAPRESSO Plus Service offers you the following within the first 12 months (within the continental USA Only):

- Free troubleshooting via telephone
- Free repair or replacement if your EspressoClassic malfunctions, including shipping costs both ways and convenient UPS ARS label.

3. EQUIPMENT

The EspressoClassic comes with:

- Measuring scoop with tamper
- Porta filter
- Small sieve, one cup
- Large sieve, two cups
- Pod sieve
- Removable water container
- Instruction manual
- Mail Order form

4. PLEASE DO NOT!

(Ignoring the following instructions may result in a VOID of your warranty protection)

- Do not use coffee pods in regular sieve; use in pod sieve only.
- Do not force the porta filter past the locked position.
- Do not attempt to steam/froth with out pre-warming first.
- Do not run the pump without water in the water tank.
- Do not try to run the appliance with a converter on other current or hertz (HZ) cycle.

5. PREPARING THE MACHINE:

a. Clean all parts.

b. Lift lid over water tank.

c. Use handle to remove water tank and fill with cold, fresh water (fig. 2).

d. Insert water tank securely into place.

e. Turn the machine on (fig.1; 1a). The red indicator light in the On/Off switch lights up.

f. When the orange thermostat light located over the selector knob illuminates, the machine has warmed up and is ready for use. (fig.1; 3)

g. Place a sieve inside porta filter – **DO NOT ADD COFFEE!**

h. Insert porta filter into filter holder by lining up arrow on thumb guard with INSERT line (fig. 3) Make sure the thumb guard is pulled back towards the handle.

i. Lift up slightly and turn porta filter to the right until it CLICKS into locked position. (Do not force past the "LOCK" position!).

j. Place a cup underneath porta filter. (fig. 11)

k. Turn selector knob to right "brewing coffee" position (fig. 6)

l. Allow 3-4 ounces of water to run through machine. Turn the selector knob left back to the "O"-position. (fig. 5).

6. AUTOMATIC WATER DISCHARGE INTO TRAY

ATTENTION: The EspressoClassic heats the water in a stainless steel lined Thermoblock system. Whenever you return the selector knob back to the "O"-position within a few seconds the machine will start to make noise. This noise indicates that the machine is discarding a small amount of warm "rest" water from the Thermoblock into the drip tray. (The machine will do this automatically.) Doing this eliminates any stale water build-up. The drip tray holds approximately 16 ounces of water and will overflow after about 20 cups of espresso.

IMPORTANT: To avoid water overflow we recommend pulling out and emptying the tray after every 10 cups of espresso. (fig. 17).

7. ESPRESSO COFFEE

An espresso is a highly concentrated coffee beverage (that is the reason, why most people add a bit of sugar to it!) Coffee bars use 7 to 8 grams of coffee per cup. The small sieve (fig. 1; 10b) holds 7 grams, the large sieve (fig. 1; 10c) holds 15 grams of coffee. A cup or "shot"of espresso, as it is commonly referred to, is no more than 1 to 1 1/2 oz. Actual brewing time is 20 to 40 seconds. After brewing, the espresso should have a dense, foamy layer on top, called "CREMA." The crema indicates that the espresso is brewed correctly. It traps the aroma of the coffee underneath. The two most

important factors for the right espresso flow and the crema production are
- **correct grind**
- **water temperature**

If the **grind is too fine**, no water or very little water will pass through the coffee. The result is no coffee or a bitter coffee without crema.
CAUTION: Too much pressure!
If no water or very little water passes through the machine, pressure will build up. Turn the selector switch back to the "O"-position and let sit for a minute. Then remove the porta filter very slowly, so that the excess pressure can escape. If you remove the porta filter too fast, hot ground coffee can jump out of the porta filter.

If the **grind is too coarse**, water will pass through too fast. The result is a weak coffee with little crema.

8. THE COFFEE GRIND

It is very important that your coffee is ground correctly. **Ask your local coffee store to grind your espresso about two to three settings coarser than usual.** The vast majorities of coffee specialty houses have properly maintained grinders and will be able to accommodate your request. (Supermarket grinders may not always be maintained properly. Like home blade grinders, they may produce a lot of coffee dust. Coffee dust clogs the sieve, even if the coffee looks coarse.) If you have problems with the flow-through of your coffee call:
HELP CALL: 1-800-767-3554.

If you prefer to grind your own beans ALWAYS use a burr grinder. Capresso offers a range of Burr Grinders which will grind the coffee perfectly for your espresso pump machine.
See www.capresso.com

9. MAKING ESPRESSO

a. Before making the first cup of espresso we recommend that you pre-warm the machine, filter holder, and cup. Otherwise you may run the risk that your first cup of espresso is not as hot as it could be.

b. Insert and lock the filter holder without a sieve and place an empty cup underneath spout. Turn selector knob to the cup position (fig. 6). Let two or three ounces of water run into the cup. Turn the selector knob back to the "O"- position to stop the flow of water (fig. 5).

c. Remove the porta filter, insert the sieve and slightly overfill the sieve with coffee. Use the tamper on the end of the measuring scoop and tamp (pack) the coffee slightly down (fig. 4). Do not tamp too hard!

d. Remove any coffee from the rim of the sieve (fig. 4a).

e. Insert the porta filter and turn to the right until it is in the locked position (you will here a "click" as it locks) (fig. 3).

f. Place a cup underneath the porta filter and turn the selector knob to the coffee cup position. Once the desired amount of coffee has been dispensed into your cup, turn selector knob back to the "O"-position.

g. Remove the cup, add sugar to taste, and enjoy immediately. (Do not let an espresso sit for a long period of time after brewing, as its temperature will drop rapidly.)

10. CLEANING PORTA FILTER AND SIEVE AFTER EACH USE

Before making the next espresso:

a. Remove porta filter by turning it to the left toward the"INSERT"-position and release.

b. Tilt thumb guard forward until top is over sieve and dump used coffee grinds into garbage (fig. 18). If you fail to place thumb guard over sieve it will fall into the garbage.

c. Remove sieve from porta filter and rinse with warm water to remove any used coffee grinds. Hold sieve up to light to check if the small holes are clean.

d. Rinse porta filter with warm water.

11. CHOOSING THE RIGHT SIEVE

Your EspressoClassic comes with 3 different sieves. Two "regular" sieves and one "pod" sieve (see Chapter 12, "Using Pre-Packed Coffee Pods").

The small (one cup) sieve holds approximately 7 grams of coffee. This is normally enough to make one espresso measuring 1 1/2 oz. or up to a 6 oz. cup of "crema" coffee. The large (two cup) sieve holds approximately 15 grams of coffee and will produce an extra strong single espresso, two espressos, or up to a 12 oz. cup of "crema" coffee.

Coffee is always dispersed from both spouts on the porta filter. When making one cup, be sure your cup is centered underneath both spouts. (fig. 11). When making two espressos or two cups of coffee, be sure to place two cups underneath the porta filter (fig. 10).

12. USING PRE-PACKED COFFEE PODS

The special "pod" sieve allows you to use pre-packed coffee pods (fig. 9). **Please be sure to use the 45mm diameter pods with your EspressoClassic.** (These are most commonly available.) Other sizes do not work with the EspressoClassic.

ATTENTION: Some pods have a small tab that sticks out. Be sure to fold the tab under before inserting the pod into the pod sieve. (Failure to do so will result in water spilling out.)

Some coffee pods have a large paper rim and a "down" and "up" marking. Cut around the outer rim of the pod leaving about 3/8 of an inch around the coffee. **Before cutting** check to see which sides goes face down.

Using coffee pods might not produce as much crema as brewing with ground coffee.

One coffee pod normally yields one serving. If you are making a double shot you must use two pods. **DO NOT PLACE 2 PODS IN SIEVE AT THE SAME TIME:** to brew a double shot, you must brew with one pod at a time, into the same cup.

13. FROTHING AND STEAMING

Use this feature to heat up liquids or to froth or steam milk for cappuccinos or lattes.

Before you start:

a. The removable parts of the frother (cylinder and black tip) are high precision parts (see fig. 12,13, 14). Always keep these two parts clean and free of milk residue. The black tip has a hole on the bottom and two small holes on the side connected by a small groove. Make sure that <u>all three</u> holes and the groove of the tip are completely free of hardened milk. Otherwise you won't get frothy milk (see chapter 14c for cleaning).

b. Initially the frother tip is attached more than finger tight at the factory. Before first use, loosen the tip using a coin (see fig. 13). Make sure the tip is screwed on finger tight. If the tip is sitting loosely on the frother, steam and air will escape to the sides. You won't get frothy milk.

<u>FOR FROTHING</u>: the cylinder of the frother should be pushed down (see fig. 12).

<u>FOR STEAMING</u>: the cylinder of the frother should be pushed up (see fig. 12).

14. MAKING CAPPUCCINO

Italian Cappuccino is the combination of one or two espressos with 3 to 6 oz. of hot frothed milk. With the EspressoClassic you can either prepare the coffee first and then froth the

milk, or froth the milk first and then prepare the espresso directly into the cup which contains the frothed milk.

14a. FROTHING MILK FOR CAPPUCCINO

TIP: When frothing milk, make sure your container has enough room for the milk froth to expand, e.g. if you want to steam and froth 6 oz. of milk, your container should have at least a 12 oz. capacity.

TIP: For a novice it may be easier to steam and froth with a bit more milk. No milk will be wasted as it can be re-used again later. With practice you will be able to steam even small amounts of milk directly in your cappuccino cup and then add the espresso shot.

a. Fill a pitcher with cold milk.
Note: Always start with cold milk. Skim milk (0% fat) will produce the most froth and will let you taste more of your espresso. 1% and 2% milk will give you a bit less froth. Regular milk (3% fat) will produce half or less than half the froth of skim milk.

b. Press the selector switch on top of machine to the steam position (fig, 1; 1b).

c. Turn selector knob to the pre-heating position (fig. 7). When the orange thermostat light illuminates, the system is ready to froth.

d. Make sure the cylinder of the frother is pushed down (fig. 12).

e. Immerse the frother into the milk so that the tip of the frother, including the small side holes is beneath the surface of the milk (fig. 15). Make sure that the frother tip does not touch the bottom of the pitcher.

f. Turn the selector knob to the steam position (fig. 8). The machine will produce steam. Steam output is continuous.

Note: During steaming you will hear a slight knocking noise. This indicates that small water droplets are pumped into the Thermoblock system to be transformed into steam.

g. When you have enough hot frothed milk, turn the selector knob back to the "O"– position (fig. 5).

h. You can now immediately brew your espresso coffee and combine it with the hot frothed milk for a wonderful cappuccino.

14b. INCREASING TEMPERATURE OF FROTHED MILK

If your frothed milk is not hot enough, proceed as follows: Move the cylinder of the frother up (fig. 12). Immerse the frother into the frothed milk and continue steaming. Steam will increase the temperature of the milk without increasing the froth. Make sure that the milk does not start boiling. Boiling will destroy the froth on top of the milk.

14c. CLEANING THE DUAL FROTHER

Fast Cleaning:

Cleaning the frother takes less than 30 seconds. If you do not clean the frother after using milk, the milk will harden and the frother will not be able to create milk froth the next time you use it. It is also much more difficult to remove hardened milk at a later time.

- Clean the outside of the frother with a damp cloth.
- Hold a container underneath the frother. Press the selector switch on top of the machine to the hot water position (fig. 1, 1b).
- Turn the selector knob to the steam position (fig. 8). Let hot water run for several seconds through the frother.

Thorough Cleaning:

- Unscrew the black tip (fig. 13 & 14). Make sure that all openings including the two small side holes and the groove are free of milk deposits.
- Replace cylinder and screw on tip finger tight.

15. MAKING LATTE

Latte is similar to Cappuccino. The difference is that, in general, the milk added has very little or no froth on top.

- Make sure that the cylinder of the frother is in the "up" position during steaming (see fig. 12).
- For detailed steaming instructions see chapter 14a.

16. DISPENSING HOT WATER FOR TEA, SOUP, ETC.

You may dispense hot water for making tea, instant soup, etc. through the frother.

a. Press the selector switch on top of the machine to the hot water position (fig. 1; 1b).
b. Place a cup or a glass underneath the tip of the frother.
c. Turn the selector knob to the steam position (fig. 8).
d. The machine will immediately dis - pense a fast stream of hot water.
e. To stop the flow of water, turn the selector knob back to the "O"-position (fig. 5).

17. CLEANING

CAUTION: Let the machine cool down before cleaning. For your safety we recommend unplugging the machine before cleaning. **Never** immerse the appliance in water or any other liquid. **Never** clean appliance under running water. **Never** use scouring agents. To clean:

a. Wipe with a soft, damp cloth.
b. Lift and pull out the drip tray (fig. 17).
c. Clean the grid, drip tray, water tank, and filter holder under running water and dry thoroughly. Do not put drip try in the dishwasher.
d. Rinse porta filter and sieves with warm, soapy water.

18. CLEANING SIEVES AND INNER SCREEN

- Clean the sieves with warm water, making sure that the mesh is free of coffee oils. Hold sieve up to light to check if the small holes are clean. Soak in a mild detergent and scrub lightly if necessary.
- The inner screen should also be cleaned. Use a coin to unscrew inner screen (fig. 18). Wipe inside clean and replace screen. Make sure to screw in securely.

19. DECALCIFYING (With Vinegar)

For prolonged use of your EspressoClassic it is necessary to decalcify the machine regularly. Calcium (limestone) found in drinking water will leave deposits in the machine that may cause clogging.

We highly recommend that you decalcify your machine at least twice a year or after about 400 uses (= 400 espressos or 200 espressos plus 200 frothing cycles).

Decalcifying Instructions:

MACHINE IS OFF

a. Before you start decalcifying remove the inner screen (fig. 18).
b. Insert the porta filter without a sieve and place a large container underneath the porta filter.
c. Fill the water container with three cups (24 oz.) of water and 1 1/2 cups (12 oz.) of white household vinegar.
d. TURN MACHINE ON and pump about 4 oz. of water through the portafilter. Stop and let machine rest for approx. 2 minutes. Repeat 4 times.
e. Now decalcify the frother. Place a container underneath the frother. Press the selector switch on top of the machine to the hot water position and turn the selector knob to the steam position (fig. 8). Let about 4 oz. of water run through the steam tube. Then stop and let machine rest for approx. 2 minutes. Repeat three or four times.

f. Clean water tank thoroughly, fill with fresh water and pump half of the water through the porta filter and half through the steam tube to eliminate any vinegar smell or taste.

g. Replace the inner screen and the steam nozzle.

If using a commercial decalcifying agent please make sure it is suitable for drip coffee makers and follow the manufacturer's instructions.

20. DECALCIFYING WITH DURGOL

Capresso and many European companies recommend "Durgol" – a liquid decalcifying agent that removes calcium deposits up to 20 times faster than vinegar.

Prepare the machine as described in Chapter 19 – steps (a) and (b).

Pour one cup of water, then one cup of Durgol into the water tank (total of 16 oz.).

a. Turn the machine on and pump about 4 oz. of water through the porta filter. Stop and let machine rest for approximately 2 minutes. Repeat one more time.

b. Now decalcify the steam tube. Place a container underneath the steam tube. Press selector switch on top of the machine to the hot water position and turn the selector knob to the steam position (fig. 8). Let about 4 oz. of water run through the steam tube. Then stop and let machine rest for approx. 2 minutes. Repeat one more time.

c. Clean water tank thoroughly by filling half way with fresh water. Pump half of the water through the porta filter and half through the steam tube to eliminate Durgol residue.

d. Replace the inner screen and the steam nozzle.

21. TROUBLESHOOTING

a. My coffee is not hot enough

- See chapter 9 (a).
- Drink your coffee immediately after brewing.
  For cappuccino or latte: make sure to increase the milk temperature chapter 14b).

b. No coffee or very little coffee comes through the porta filter

- Make sure the water tank has water in it and that it is inserted properly.
- Make sure the selector knob points to the coffee cup position.
- The coffee may be ground too fine, use coarser coffee (chapter 7).
- The small holes of the sieve may be blocked, clean sieves (chapter 18).
- The inner screen may be blocked (chapter 18).

c. Coffee runs very fast into the cups with very little crema

- Your coffee may be ground too coarse. Use a finer grind.
- Make sure the sieve is always filled completely with coffee.

d. Coffee does not flow into both cups at exactly the same rate

- Clean the porta filter and the sieve (chapter 18).
- Make sure the sieve is filled completely and evenly.
- Coffee may be ground unevenly allowing water to pass through it faster on one side than through the other.

e. I am not getting any crema or not enough crema

- Your coffee is not ground correctly. If the flow of coffee is too slow, use a coarser grind, if the flow of coffee is too fast, use a finer grind.
- When using pre-packed pods you normally get less crema than when using ground coffee. Make sure to use the pod sieve with pods.

f. There is some coffee residue in the bottom of my cup

- This is normal. With pressure brewed coffee you will always have some fine coffee powder in the bottom of your cup.
- If this bothers you, try pre-packed coffee pods (chapter 12). The paper cover acts like a filter.

g. Water and coffee run down on the side of the porta filter

- Wipe the inner screen with a wet paper towel.
- Make sure that the rim of the sieve and the porta filter are free of coffee grounds before inserting into the machine.
- When using pre-packed coffee pods: trim the sides of the paper cover so that the paper does not extend outside of the sieve.

h. When using the frother I am not getting sufficient froth

- If you had sufficient froth before then some or all of the frother parts are not clean. See chapter 14c.
- The best froth is made with low or no fat milk. Using whole milk may result in a "weaker" froth.

i. The frothed milk is not hot enough

- See Chapter 14b on how to increase the milk temperature.

22. FREQUENTLY ASKED QUESTIONS about...

...Coffee

a. Where and how should I store my coffee?

- Ideally coffee beans should be ground just prior to brewing.
- **Whole coffee beans** stay fresh for approximately two weeks. Store in a dark, airtight container. Do not store in freezer or refrigerator.
- **Ground coffee** loses flavor from the moment it is ground; be sure to store in a dark, airtight container. Do not store in freezer or refrigerator. Ground coffee has a very high oxidation rate and may take on flavors and aromas from other foods.

b. Should I use dark or light coffee beans?

- In Italy the beans for espresso are roasted to a light to medium color (no oils on the outside). That gives the espresso a rich, strong taste without bitterness.
- In the USA most specialty roasters roast the beans for espresso to a dark to very dark color with more or less oils on the outside. This gives the espresso a more intense and sometimes bitter taste. Many people prefer that type roast when drinking cappuccino or latte since the milk eliminates some or all of the bitterness.
- Try both kinds and see what you like best.

c. Can I use the same coffee for espresso and "crema coffee?"

- Yes, when you brew longer ("Crema coffee") the taste will be less intense. You can also brew an espresso and then add hot water. This is called a Coffee Americano.

d. Which coffee is better for cappuccino, "French Roast" or "Italian Roast"?

- This is totally up to you. Try it out. Normally the "French Roast" is roasted slightly longer and at a slightly higher temperature giving it a stronger and more bitter taste.

e. Can I use coffee that is not labeled "espresso"?

- Yes you can. Make sure it is "Arabica" coffee or a blend with "Arabica" beans. "Robusta" beans are normally used for drip coffee and have less aroma.

...the Espresso Machine

f. Can I fill other liquids into the water tank, such as milk or sweetened water?

- No, you will destroy the pump and the Thermoblock system.

g. Can I use distilled water?

- Yes, although distilled water is free of important minerals and may give your coffee a different taste. You can also use "reverse osmosis" water.

h. Can I use the machine overseas with a converter?

- We do not recommend it. The machine is designed for 120 volts/ 60Hz. Other voltage and Hz cycles might damage the machine. Also, Capresso's warranty covers the United States only (see chapter 23).

i. Can I send the machine to another country with 120-volt/60Hz configuration?

- Yes, but in case the machine needs service the transportation costs will not be covered by Capresso. Our warranty is limited to the United States (see chapter 23).

j. I have a small grinder with a blade. Can I use this grinder to grind my coffee for this machine?

- Try it. In most cases blade grinders will create too much "coffee dust". It will clog the fine holes in the sieve. The water will not be able to pass through the coffee. A burr grinder gives you a more consistent grind (chapter 8).

k. How long can I leave the machine on?

- The EspressoClassic is in standby when not in use. You can leave it on all day long.

23. LIMITED WARRANTY

This warranty covers your EspressoClassic machine, model #113 and #114. This warranty is in effect for one year from the date of initial consumer purchase, and is limited to the United States of America. This warranty covers all defects in materials or workmanship (parts and labor) including UPS ground transportation both ways, if necessary.

The warranty **DOES NOT** cover:

- Any machine not distributed by CAPRESSO within the United States.
- Any machine not purchased from and Authorized CAPRESSO Dealer.
- Commercial use of the machine.
- Damage caused by accident, abuse, negligence, misuse, improper operation or failure to follow instructions contained in this manual.
- Any service or alteration performed by an unauthorized person, company, or association.

Other limitations and exclusions:
Any implied warranties including fitness for use and merchantability are limited in duration to the period of the express warranty set forth above and no person is authorized to assume for CAPRESSO any other liability in connection with the sale of the machine.

CAPRESSO expressly disclaims liability for incidental and consequential damages caused by the machine. The term "incidental damages" refers to the loss of the original purchasers time, loss of the use of the machine or other costs relating to the care and custody of the machine. The term "consequential damages" refers to the cost of the repairing or replacing other property which is damaged when this machine does not work properly. The remedies provided under this warranty are exclusive and in lieu of all others.

This warranty gives you specific legal rights. Rights may vary from state to state.

CAPRESSO EspressoClassic
Product Registration

Please complete this registration after you have used your machine for a few days. Your information will help us to better serve you in the future. Thank you for buying from CAPRESSO.

Please print clearly

Last Name_____

First Name_____ ❑ Male ❑ Female

Address_____

City_____State_____Zip_____

Your Email Address_____

Purchased from:

❑ Specialty store ❑ Mail order ❑ Department store ❑ Internet company
❑ Received as gift

Name of retailer_____

Purchase Date_____ Purchase Price $_____

Reasons for buying this product:
❑ Concept/Features ❑ Saw it on TV ❑ Print advertising
❑ Retailer recommendation ❑ Recommended by a friend

Do you use an espresso/cappuccino machine regularly?:
❑ Yes ❑ No

I drink (mark all that apply):
❑ Regular coffee ❑ Cappuccino ❑ Latte ❑ Espresso ❑ Hot Chocolate

What other espresso machine did you use before?:
❑ None ❑ Krups ❑ Salton ❑ Gaggia ❑ DeLonghi
❑ Other:_____

Would you like more information about our products?: ❑ Yes ❑ No

Your annual household income:
❑ Under $50,000 ❑ $50,000 – $100,000 ❑ $100,000 – $250,000 ❑ $250,000 +

Your age group: ❑ Under 25 ❑ 25–40 ❑ 41–45 ❑ 46-55 ❑ 56-65 ❑ 65 +

Any suggestions on how we can improve this product?

_____

_____

Would you recommend this product to your friends?: ❑ Yes ❑ No

Mail to CAPRESSO Inc., P.O. Box 775, CLOSTER, NJ 07624
or **FAX** to: **(201) 767-9684.**

CAPRESSO CUSTOMER SERVICE
81 Ruckman Road
Closter, New Jersey 07624

HELP CALL: 1-800-767-3554
Fax: 201-767-9684

Email address: contact@capresso.com
Website: www.capresso.com

Capresso

81 Ruckman Road, Closter, NJ 07624
201-767-3999 • Fax: 201-767-9684
Customer Service: 1-800-767-3554
Email: contact@capresso.com
Website: www.capresso.com